ALCE

TRANSFORMING
SUPPORTING

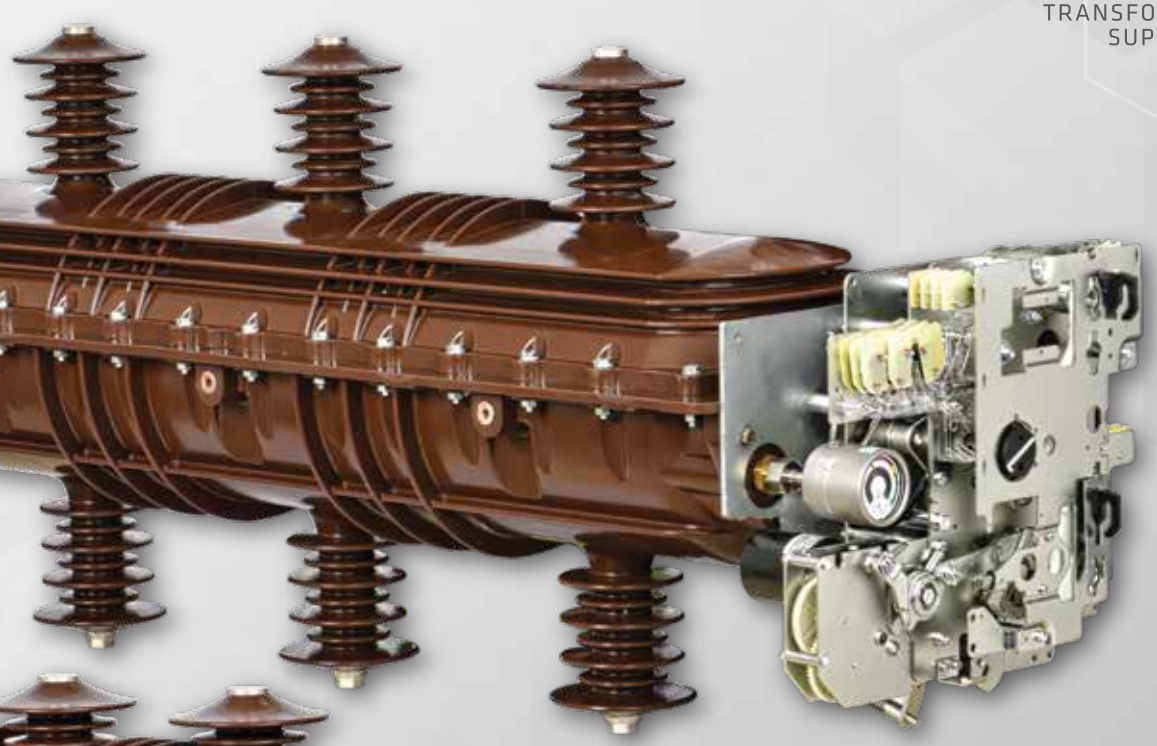

LOAD BREAK SWITCHS & DISCONNECTORS

LOAD BREAK SWITCHS & DISCONNECTORS

Type	Page
Load Breaker Switch	02
Technical Characteristics	03
LBS 24	04
LBS 36	05
ALC1, ALC2	06
ALC3, ALC4	07
Auxiliaries	08

GENERAL CHARACTERISTICS

Rated Voltage (kV)		12	24	36
Insulation level				
50 Hz - 1 min	Insulation	28	50	70
(kV r ms)		32	60	80
1.2/50 µs		75	125	170
(kV peak)		85	145	195

SHORT-TIME WITHSTAND CURRENT

Switch (kA/1s)	12,5	630 A	630 A	630 A
	16			
	20			
	25			
Disconnector (kA/1s)	12,5	630 - 1250 A	630 - 1250 A	630 - 1250 A
	16			
	20			
	25			
Maxsimum breaking capacity		16	16	16
Transformer off load (A)		16	16	16
Cables off load (a) 31.5 50		31,5	31,5	31,5
Switch (A) 630		630	630	630
Fuse-switch ** (kA)		25	20	20

- The making capacity is equal to 2.5 times the short-time withstand current.
- Equipped referring to installation guide, and setting up at an altitude below 1000 m.

ENDURANCE

Units	Mechanical Endurance	Electrical Endurance
Switch	IEC 60265	IEC 60265 Class E3
Fuse-switch	1000 Operations Class M1	100 Breaks at In, p.f.=0.7 Class 3
Disconnector	IEC 62271-102 1000 Operations	

TEMPERATURES

The products must be stored in a dry area free from dust and with limited temperature variations	* for stocking: from –40°C to +70°C * for working: from –5°C to +40°C * other temperatures, consult us

OPERATING SAFETY

• The switch may be in one of three positions: “closed”, “open” or “earthed”, representing a natural interlocking system that prevents incorrect operation. Moving-contact rotation is driven by a fast-acting mechanism that is independentof the action of the operator.

• The earthing switch placed in the SF6 has a short-circuit making capacity, in compliance with standards

• Any accidental over-pressures are eliminated by the opening of the safetymembrane, in which case the gas is directed toward the back of the unit, away from the operator.

GAS TIGHTNESS

• The three rotating contacts are placed in an enclosure filled with gas to a relative pressure of 1.4 bar (1400 hPa) for Load Break Switch 24 kV and 2.0 bar (2000 h Pa) for Load Break Switch 36 kV. It satisfies “sealed pressure system” requirements and seal tightness is always factory checked.

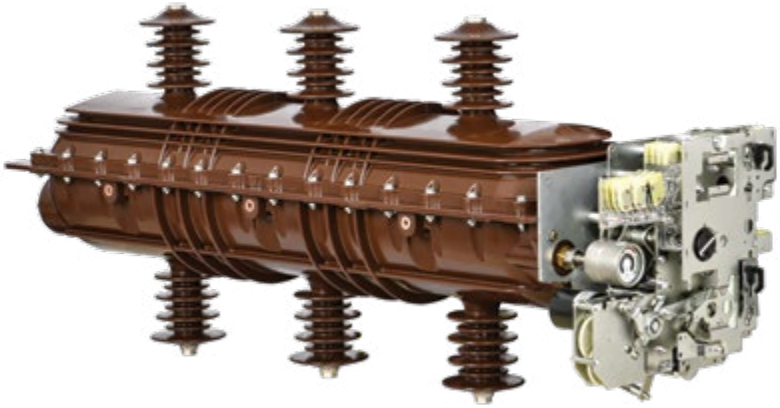

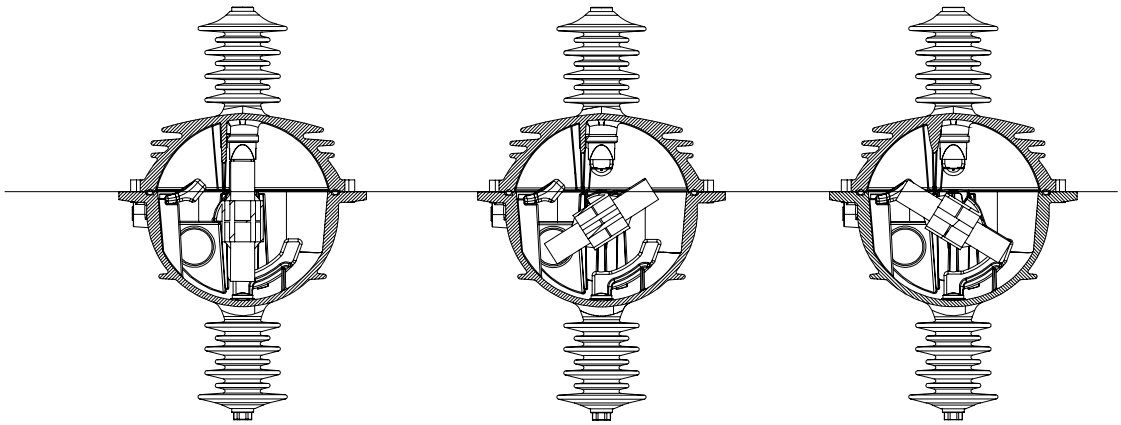

Closed Position **Open Position** **Earth Position**

LBS 24

630 A switch - 1250 A disconnector
Weight: 50 kg

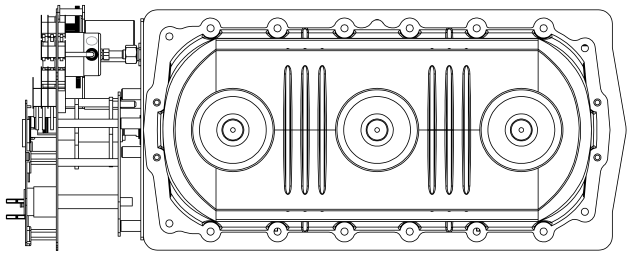

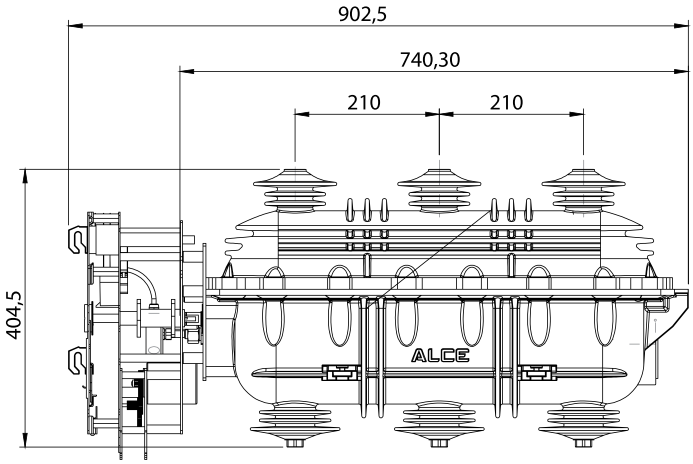

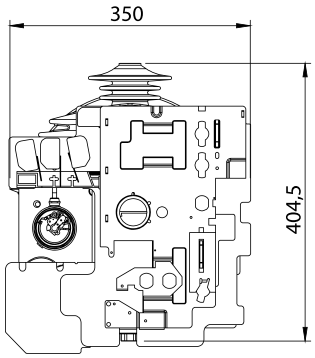

LBS 36

630 A switch - 1250 A disconnector
Weight: 75 kg

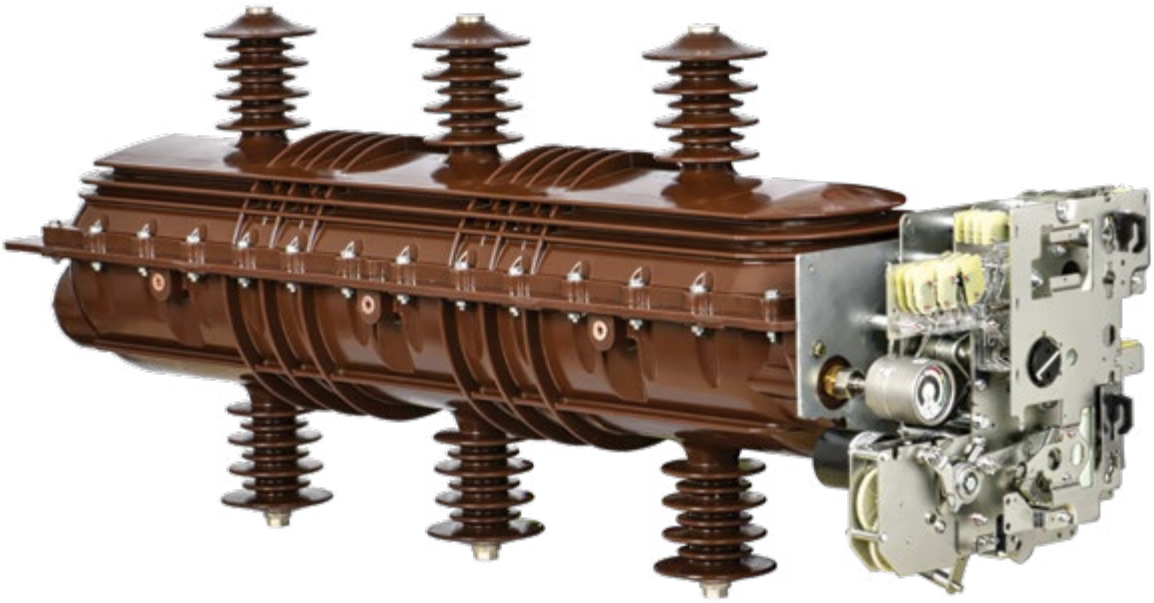

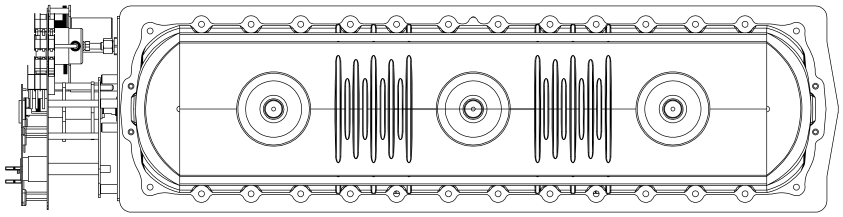

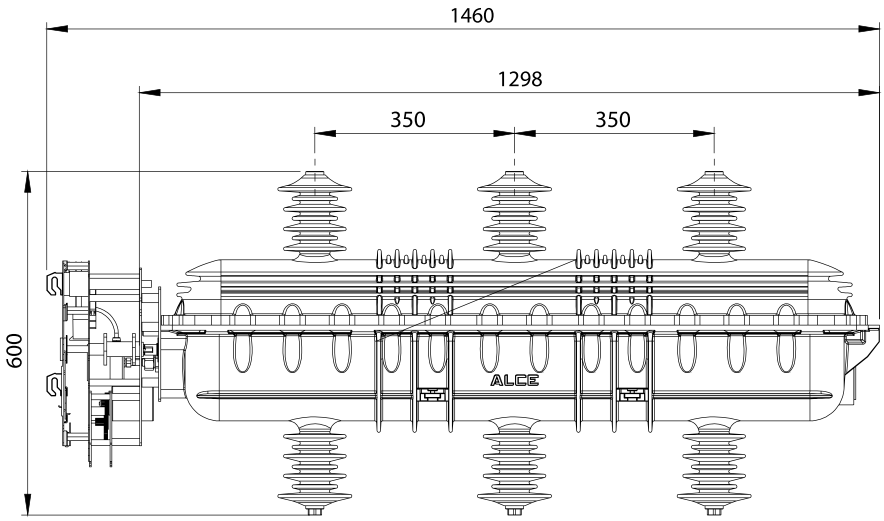

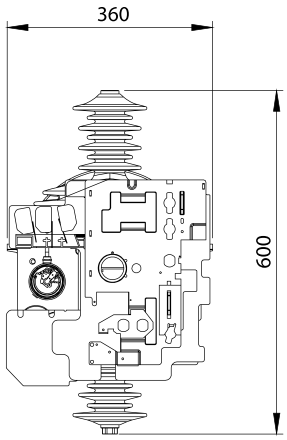

ALC1

Double-function operating mechanism ALC1 (Load break switch)

*** Switch function**

Independent-operation opening or closing by lever or motor.

*** Earthing-switch function**

Independent-operation opening or closing by lever.
Operating energy is provided by a compressed spring which, when released, causes the contacts to open or close.

*** Auxiliary contacts**

- Switch (2 O + 2 C) *
- Switch (2 O + 3 C) and earthing switch (1 O + 1 C).

*** Motor option**

ALC2

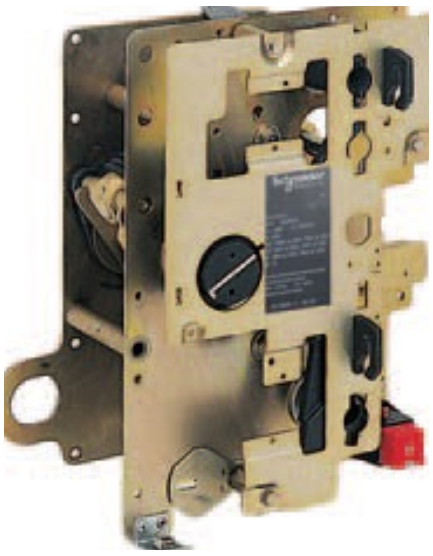

Double-function operating mechanism ALC2

*** Switch function**

- Independent-operation closing by lever.

Operating energy is provided by a compressed spring which, when released, causes the contacts to close.

- Independent-operation opening by push-button (O) or trip units.

*** Earthing-switch function**

Independent-operation closing and opening by lever.
Operating energy is provided by a compressed spring which, when released, causes the contacts to open or close.

*** Auxiliary contacts**

- Switch (2 O + 2 C)
- Switch (2 O + 3 C) and earthing switch (1 O + 1 C).

*** Opening releases**

- Shunt trip.

ALC3

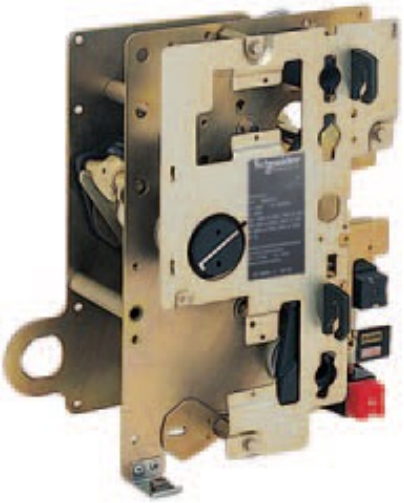

Double-function operating mechanism ALC3 (Load break switch)

*** Switch function**
- Independent-operation closing in two steps:
1 - Operating mechanism recharging by lever or motor
2 - Stored energy released by push-button (I) or trip unit.
- Independent-operation opening by push-button (O) or trip unit.

*** Earthing-switch function**
Independent-operation closing and opening by lever.
Operating energy is provided by a compressed spring which, when released, causes the contacts to open or close.

*** Auxiliary contacts**
- Switch (2 O + 2 C) *
- Switch (2 O + 3 C) and earthing switch (1 O + 1 C).

*** Opening release shunt trip**
*** Closing release shunt trip**
*** Motor option**

ALC4

Double-function operating mechanism ALC4 (Disconnector)
*** Switch and earth switch functions**
Dependent-operation opening and closing by lever.

*** Auxiliary contacts**
- Disconnector (2 O + 2 C).

AUXILIARIES

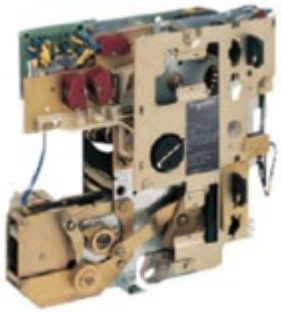

Motor option and releases for switch-units

The operating mechanisms ALC1 and ALC3 may be motorised.

Un		DC			AC (50/60 Hz)
Power supply	(V)	24	48	110	220
Motor option					
	(W)	200			
	(VA)				200
Operating time for ALC1	(s)	1 to 2			1 to 2
and charging time for ALC3	(s)	4 to 7			4 to 7
Opening releases					
Shunt trip	(W)	200	250	300	
	(VA)				750
Response time	(ms)	55			55

Example of applications for main line switching	Types of operating mechanism	
	Without motor	With motor
Manuel operation		
With lever	ALC1	
With push button	ALC2, ALC3, ALC4	
Remote control		
For network management without need of quick opening and closing		ALC1
For network management for quick switching (generator, loop) or transformer protection		ALC3

ALCE ELEKTRİK SAN.ve TİC.A.Ş.
Ramazanoğlu Mah. Transtek Cad. No:6
Pendik 34906 İstanbul, TURKEY
P: +90 216 585 42 00 F: +90 216 378 23 27
www.alce-elektrik.com.tr
info@alce-elektrik.com.tr

CT_IT_2021_R01